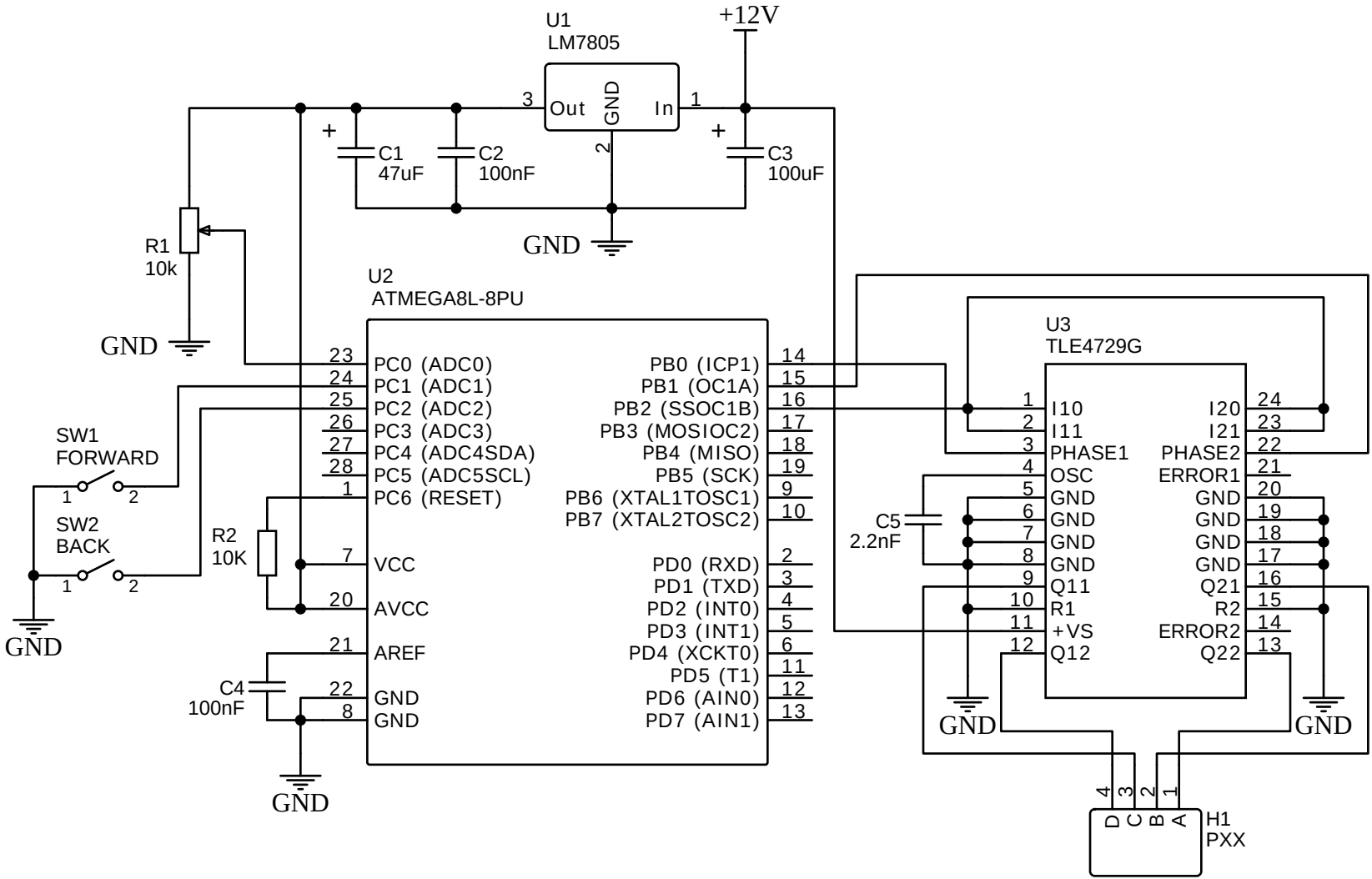
U1
LM7805
+12V
Out
GND
In
3
1
2
C1
47uF
C2
100nF
C3
100uF
GND
R1
10k
GND
U2
ATMEGA8L-8PU
23 PC0 (ADC0)
24 PC1 (ADC1)
25 PC2 (ADC2)
26 PC3 (ADC3)
27 PC4 (ADC4SDA)
28 PC5 (ADC5SCL)
1 PC6 (RESET)
7 VCC
20 AVCC
21 AREF
22 GND
8 GND
PB0 (ICP1) 14
PB1 (OC1A) 15
PB2 (SSOC1B) 16
PB3 (MOSIOC2) 17
PB4 (MISO) 18
PB5 (SCK) 19
PB6 (XTAL1TOSC1) 9
PB7 (XTAL2TOSC2) 10
PD0 (RXD) 2
PD1 (TXD) 3
PD2 (INT0) 4
PD3 (INT1) 5
PD4 (XCKT0) 6
PD5 (T1) 11
PD6 (AIN0) 12
PD7 (AIN1) 13
SW1
FORWARD
SW2
BACK
R2
10K
C4
100nF
GND
U3
TLE4729G
1 I10
2 I11
3 PHASE1
4 OSC
5 GND
6 GND
7 GND
8 GND
9 Q11
10 R1
11 +VS
12 Q12
24 I20
23 I21
22 PHASE2
21 ERROR1
20 GND
19 GND
18 GND
17 GND
16 Q21
15 R2
14 ERROR2
13 Q22
C5
2.2nF
GND
GND
4 D
3 C
2 B
1 A
H1
PXX